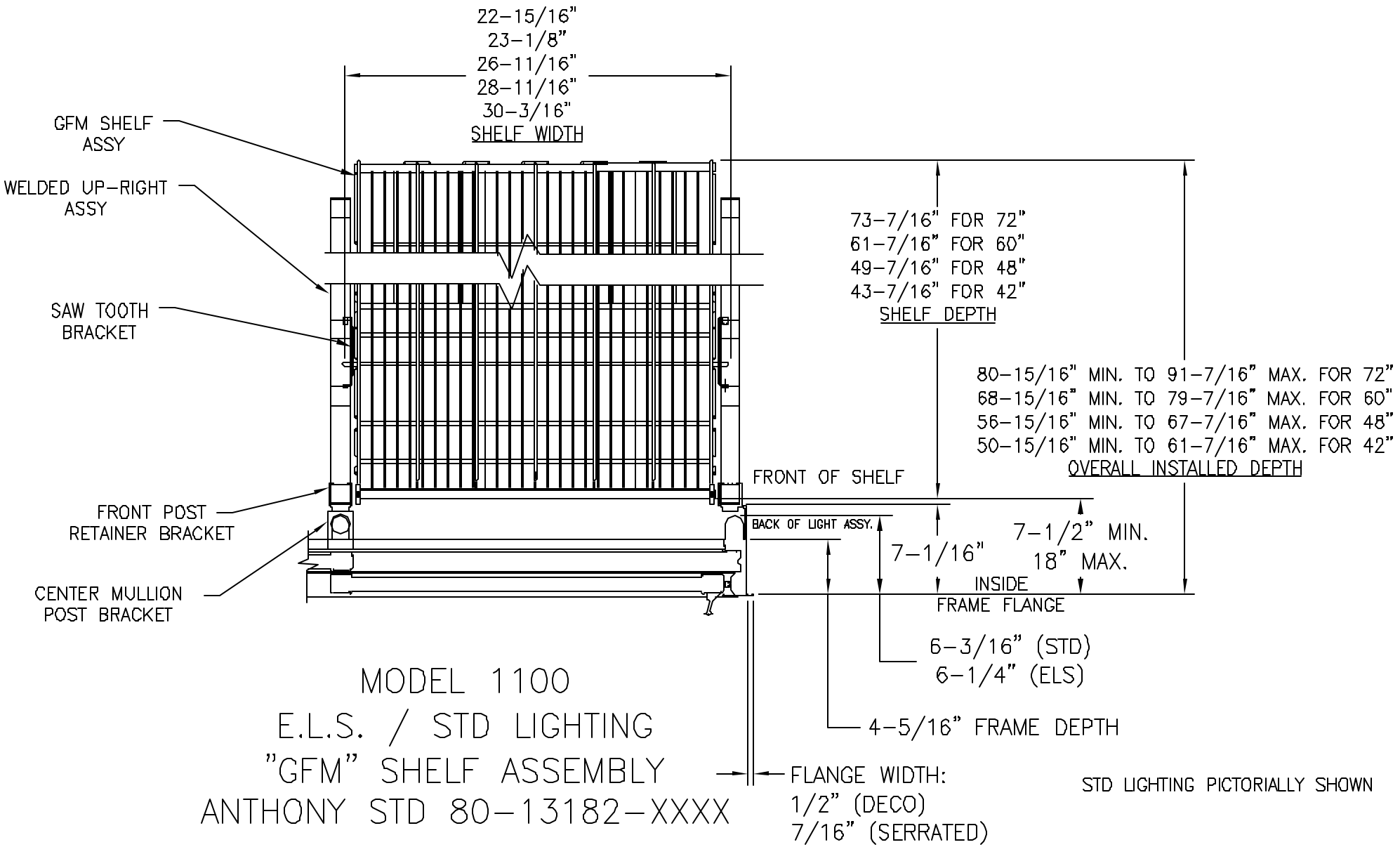

MODEL 1100
E.L.S. / STD LIGHTING
"GFM" SHELF ASSEMBLY
ANTHONY STD 80-13182-XXXX