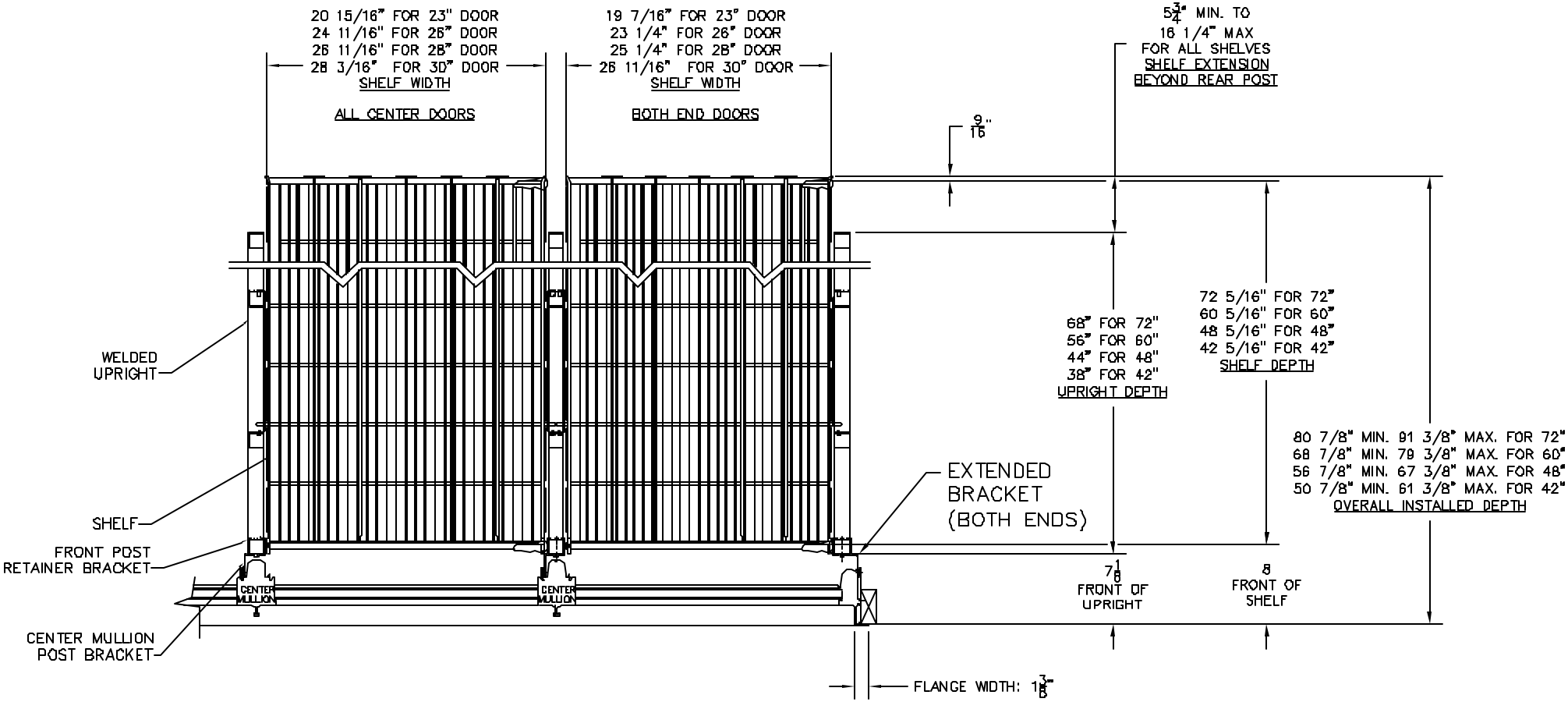

COOLRITE / FREEZERITE POWER LENS LIGHTING WITH GFM SHELVING