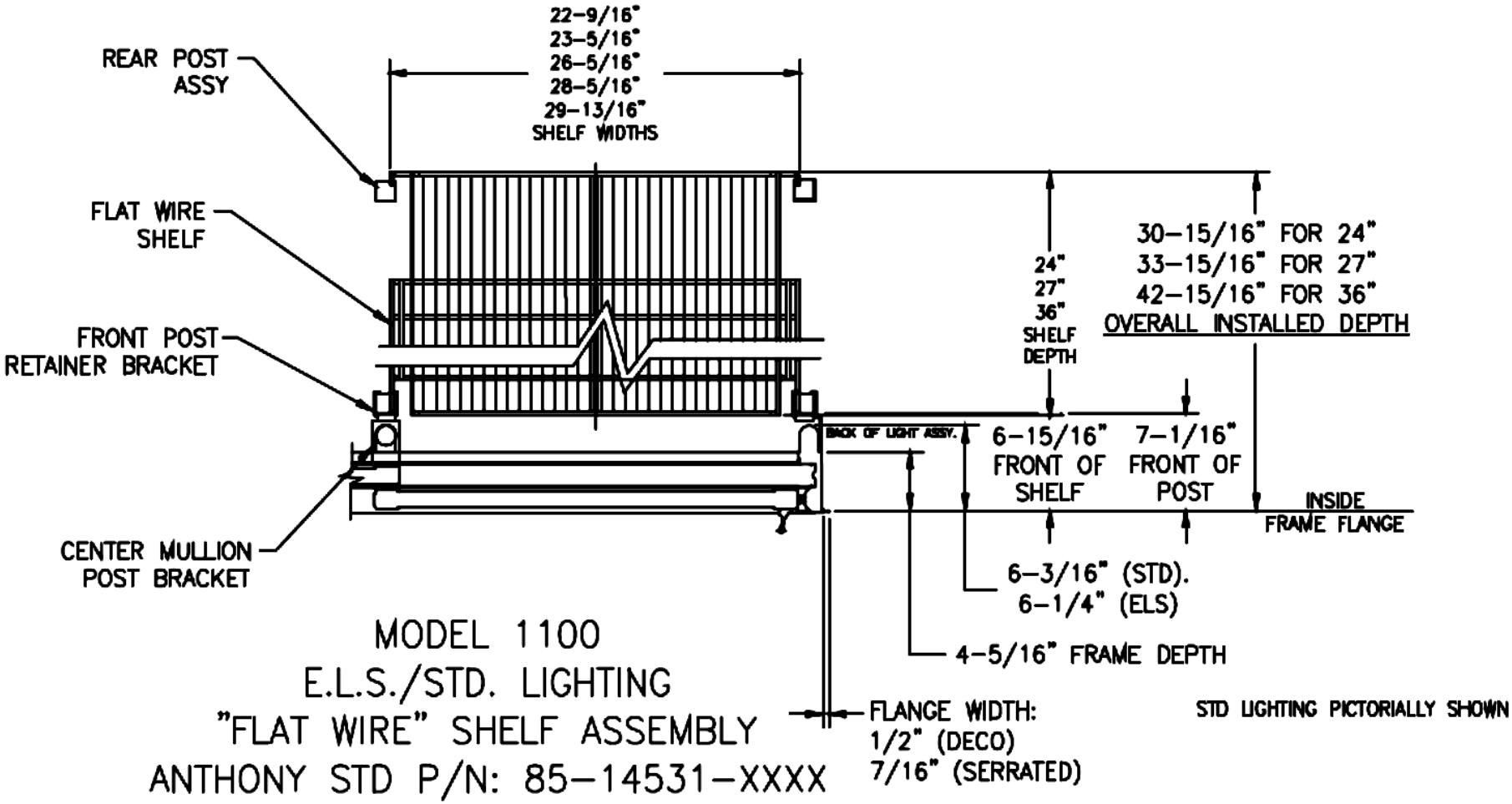


MODEL 1100
E.L.S./STD. LIGHTING
"FLAT WIRE" SHELF ASSEMBLY
ANTHONY STD P/N: 85-14531-XXXX